# LBTC

## POSITIVE DISPLACEMENT
## ROTARY VANE FLOW METER

Operation Manual


LTBC- DT- JS- 1024- 201
0/V1

**Preface**

**Thank you for choosing the products of Dandong TOP Electrical Appliance (Group) Co.**

This instruction manual provides you with important information on installation, connection and commissioning as well as for maintenance, troubleshooting and storage. Please read it carefully before installation and commissioning and keep it close to the instrument as an integral part of the product, so that you can refer to it at any time.

You can download this instruction manual by entering the version number at www.ddtop.com.

If the instrument is not operated in accordance with these instructions, the protection provided by the instrument may be impaired.

**Trademark, Copyright and Restriction Instructions**

Dandong Top Electronics Instrument (Group) Co., Ltd.®, Dandong Top Pump Co., Ltd.®, DDTOP® are registered trademarks of the company.

The performance specifications of this instrument are effective from the date of publication and are subject to change without notice. Dandong Top Electronics Instrument (Group)Co., Ltd. reserves the right to modify the products described in this manual at any time without notice.

**Quality Assurance**

Dandong Top Electronics Instrument (Group) Co., Ltd. guarantees all LBTC Positive Displacement Rotary Vane Flow Meter to be free from defects in materials and manufacturing processes within one year from the date of delivery.

During the warranty period, Dandong Top Electronics Instrument (Group) Co., Ltd. is responsible for repairing or replacing the equipment free of charge for the buyer (or owner) if the product is returned with quality problems and the claim made is determined to be covered by the warranty after inspection by the manufacturer.

Dandong Top Electronics Instrument (Group) Co. Ltd. shall not be liable for improper use of the equipment, labor claims, direct or subsequent damage, or costs arising from the installation and use of the equipment. Dandong Top Electronics Instrument (Group) Co., Ltd. does not provide any warranty, either express or implied, except for special written warranty certificates for certain products of Dandong Top Electronics Instrument (Group) Co., Ltd.

**Quality**

Dandong Top Electronics Instrument (Group) Co., Ltd. has passed the ISO9001 quality system certification. The whole production process is carried out in strict accordance with the provisions of the quality system to provide the strongest guarantee for the quality of products and services.

# CONTENT

# 1 Safety Tips

Unauthorized modification or alteration of the product is expressly forbidden for safety reasons. Repair or replacement is permitted only with parts specified by the manufacturer.

### 1.1 An explosion may cause death or serious injury.

When installing equipment in explosive atmospheres, always follow applicable local, national, and international standards, codes, and procedures. Ensure that equipment is installed in accordance with intrinsically safe or non-flammable site work procedures.

### 1.2 Serious injury or death may result from process leakage.

If the process seal is damaged, leakage of media may occur at the connection.

### 1.3 Failure to comply with safety installation guidelines may result in death or serious injury.

All operations described in these instructions must be performed by trained and qualified or end-user appointed personnel.

## 2 Product Description

### 2.1 Main product structure - Figure 1

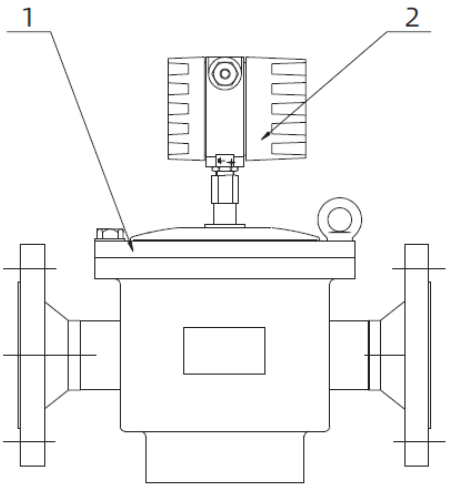


**Figure 1 Positive Displacement Rotary Vane Flow Meter**

1 - Positive Displacement Rotary Vane Flow Mete

2 - Flow Totalizers

## 2.2 Operating Principle- Figure 2

Two or three pairs of rotary vanes in the flowmeter measuring chamber, which slide radially in a slot in the rotor cylinder, are pushed to rotate with the rotor by the action of a pressurized fluid. The vanes divide the fluid continuously into individual volumes, and then measures the total fluid volume using the drive gear and counting indicator mechanism. See Figure 1 LBTC Type Scraper Flowmeter Mechanism Schematic Diagram, the action process is as follows: when the vanes are in the position shown in Figure 1.1, vane A and D are out of the rotor and contacting to the metering chamber wall, vane B and C all contracted to the rotor. When the measured liquid enters the flowmeter, the vanes and rotor are pushed to rotate in a clockwise direction. After the rotor and vane rotate an eighth of a turn, the vanes will be in the position of Figure 1.2. At this time, vane A is still fully extended, vane D begin to contract, vane C is still in full contraction, vane B begin to extend. After the rotor and vane rotate a quarter of a turn, the vanes will be in the position of Figure 1.3. Vane A and B are all extended. At this time, measured liquid is full of the space composed by vane A, B, rotor, shell cavity and the upper and lower cover plate. When the vanes rotate to the position shown in Figure 1.4, the measured liquid between vane A and B begin to discharge due to the gradual retraction of A. At the same time, vane C begin to extend, and the space between vane B and C forms new precisely measured volumes. Each rotation of the four vanes is 4 volumes of flow. (If the flowmeter is three pairs of scrapers, there'll be 6 volume flow), thus realizing the measurement for medium.

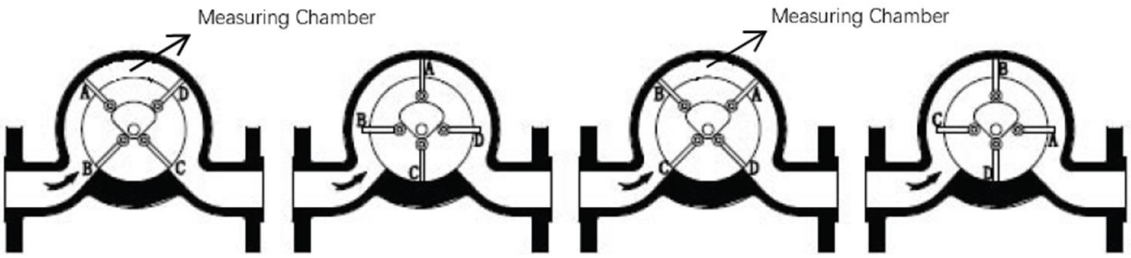


Figure 2.1 Figure 2.2 Figure 2.2 Figure 2.2

Figure 2 Mechanical Schematic

## 2.3 Packaging

Please take the packaging waste to a special recycling facility.

## 2.4 Lifting for transport

Please use qualified lifting equipment and lifting straps, and pay attention to safety.

## 2.5 Storage

Storage temperature -20℃~40℃; storage humidity≤20%.

# 3 Technical Characteristics

## 3.1 Product Features

### 3.1.1 Optional Indicator

Mechanical counting heads are available for local indication and can be equipped with pulse transmitters or smart meters for remote transmission.

### 3.1.2 High precision

The basic error of the calibrated Positive Displacement Rotary Vane Flow Meter is within ±0.5%, up to 0.2%.

### 3.1.3 Anti-wear performance

The vanes and wear parts are made of anti-wear material, which is not easy to wear and can withstand high pressure.

### 3.1.4 Permanent compression loss is smaller than that of orifice plate

Pressure loss is small. Decay rate of accuracy is low, with maximum not more than 0.1MPa; (take DN80 for example).

### 3.1.5 Shell structure

The single shell structure is simple and light; the double shell structure is not affected by tube heat up and pressure, and the deformation is small.

### 3.1.6 Good repeatability and high reliability

### 3.1.7 Long life, low cost, easy to install and maintain

### 3.1.8 No straight pipe section requirements

It is easy to install and does not require straight pipe sections, rectifiers, and other ancillary equipment, and is unaffected by elbows, valves, and other fittings.

## 3.2 Main parameters

Nominal Diameter: DN25~DN300

Nominal Pressure: 2.5MPa, 4.0MPa, 6.3MPa

Pressure Loss： maximum not more than 0.1MPa

Basic Error: 0.2%, 0.5%

Temperature of Medium: -25℃≤T≤250℃

Viscosity of the Measured Medium：0.6~500mPa.s

**Flow Rate Range**

| Nominal Diameter DN | 25 | | 50 | | 80 | | 100 | | 150 | | 200 | | 250 | | 300 | |
|---|---|---|---|---|---|---|---|---|---|---|---|---|---|---|---|---|
| Intrinsic Error % | 0.2 | 0.5 | 0.2 | 0.5 | 0.2 | 0.5 | 0.2 | 0.5 | 0.2 | 0.5 | 0.2 | 0.5 | 0.2 | 0.5 | 0.2 | 0.5 |
| Min. Flow m³/h | 3 | 1 | 8 | 5 | 25 | 18 | 35 | 25 | 60 | 40 | 100 | 80 | 120 | 110 | 300 | 200 |
| Max. Flow m³/h | 6 | 8 | 20 | 35 | 65 | 80 | 90 | 115 | 120 | 150 | 180 | 240 | 350 | 550 | 900 | 1000 |

### 3.3 Scope of application

3.3.1 Suitable for the flow measurement of low Reynolds number fluids.

3.3.2 Suitable for the flow measurement of high-viscosity fluids, liquids containing solid particles, slurry fluids, such as fuel oil, residual oil, oil slurries, etc.

3.3.3 Suitable for pipeline with nominal diameter DN25 ~ DN300

## 4 Outline drawing for dimensions.

Figure 3-1 Mechanical Type Positive Displacement Rotary Vane Flow Meter Outline Drawing

Figure 3-2 Smart Type Positive Displacement Rotary Vane Flow Meter Outline Drawing

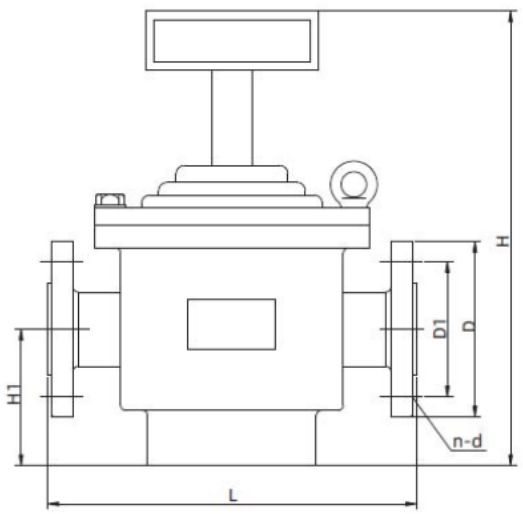


Figure 3-1 Mechanical Type Positive Displacement Rotary Vane Flow Meter Outline Drawing

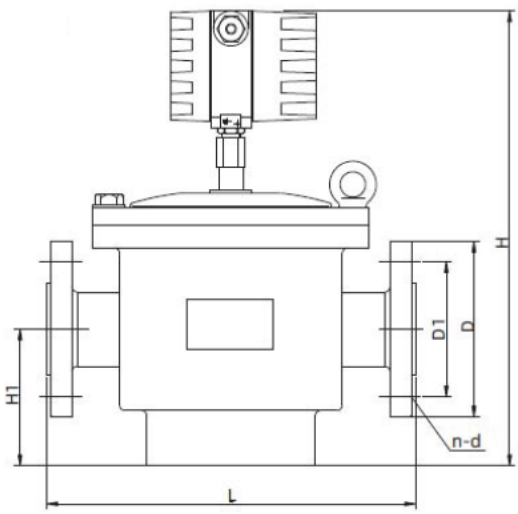


Figure 3-2 Smart Type Positive Displacement Rotary Vane Flow Meter Outline Drawing

## Outline Dimensions for LBTC Positive Displacement Rotary Vane Flow Meter Outline Drawing

| Nominal diameter | Nominal pressure | Dimensions (mm) | | | Flange connection size (mm) | | | | | | | |
|---|---|---|---|---|---|---|---|---|---|---|---|---|
| | | | | | Ductile Iron Flanged | | | | Carbon Steel or Stainless Steel Flanged | | | |
| mm | MPa | L | H | H1 | D | D1 | n-d | Bolts | D | D1 | n-d | Bolts |
| 25 | 2.5 | 248 | 360 | 90 | 115 | 85 | 4-φ14 | M12 | 115 | 85 | 4-φ14 | M12 |
| | 4.0 | 248 | 360 | 90 | 115 | 85 | 4-φ14 | M12 | 115 | 85 | 4-φ14 | M12 |
| | 6.3 | 320 | 358 | 89 | 140 | 100 | 4-φ18 | M16 | 140 | 100 | 4-φ18 | M16 |
| 50 | 2.5 | 350 | 427 | 123 | 165 | 125 | 4-φ19 | M16 | 165 | 125 | 4-φ18 | M16 |
| | 4.0 | 350 | 427 | 123 | 165 | 125 | 4-φ19 | M16 | 165 | 125 | 4-φ18 | M16 |
| | 6.3 | 460 | 686 | 184 | 175 | 135 | 4-φ23 | M20 | 180 | 135 | 4-φ23 | M20 |
| 80 | 2.5 | 440 | 427 | 160 | 200 | 160 | 8-φ19 | M16 | 200 | 160 | 8-φ18 | M16 |
| | 4.0 | 440 | 427 | 160 | 200 | 160 | 8-φ19 | M16 | 200 | 160 | 8-φ18 | M16 |
| | 6.3 | 460 | 920 | 260 | 210 | 170 | 8-φ23 | M20 | 216 | 170 | 8-φ23 | M20 |
| 100 | 2.5 | 530 | 528 | 180 | 235 | 190 | 8-φ23 | M20 | 235 | 190 | 8-φ23 | M20 |
| | 4.0 | 530 | 528 | 180 | 235 | 190 | 8-φ23 | M20 | 235 | 190 | 8-φ23 | M20 |
| | 6.3 | 622 | 996 | 319 | 250 | 200 | 8-φ25 | M22 | 250 | 200 | 8-φ25 | M32 |
| 150 | 2.5 | 650 | 596 | 216 | 300 | 250 | 8-φ28 | M24 | 300 | 250 | 8-φ26 | M24 |
| | 4.0 | 650 | 596 | 216 | 300 | 250 | 8-φ28 | M24 | 300 | 250 | 8-φ26 | M24 |
| | 6.3 | 640 | 968 | 360 | 340 | 280 | 8-φ34 | M30 | 340 | 280 | 8-φ34 | M30 |
| 200 | 2.5 | 700 | 800 | 300 | 360 | 310 | 12-φ | M24 | 360 | 310 | 12-φ26 | M24 |
| | 4.0 | 700 | 800 | 300 | 375 | 320 | 12-φ | M27 | 375 | 320 | 12-φ30 | M27 |
| | 6.3 | 900 | 1255 | 457 | 405 | 345 | 12-φ | M30 | 405 | 345 | 12-φ34 | M30 |
| 250 | 2.5 | 950 | 1100 | 540 | 425 | 370 | 12-φ | M27 | 425 | 370 | 12-φ90 | M27 |
| | 4.0 | 950 | 1100 | 540 | 450 | 385 | 12-φ | M30 | 450 | 385 | 12-φ34 | M30 |
| | 6.3 | 1040 | 1374 | 558 | 470 | 400 | 12-φ | M36 | 470 | 400 | 12-φ41 | M36 |
| 300 | 2.5 | 1000 | 887 | 455 | 485 | 430 | 16-φ | M27 | 485 | 430 | 16-φ30 | M27 |
| | 4.0 | 1000 | 887 | 455 | 515 | 450 | 16-φ | M30 | 515 | 450 | 16-φ34 | M30 |
| | 6.3 | 1150 | 1617 | 702 | 530 | 460 | 16-φ | M36 | 530 | 460 | 16-φ41 | M36 |

Note: Flange implementation standard: HG/T 20592-2009; HG/T 20615-2009

If special sizes are required in order, the actual size shall prevail.

## 5 Unpacking and Checking

### 5.1 Precautions for unpacking inspection

5.1.1 Check whether the Product Name Plate (**Figure 4**) is consistent with the information in the supply list.

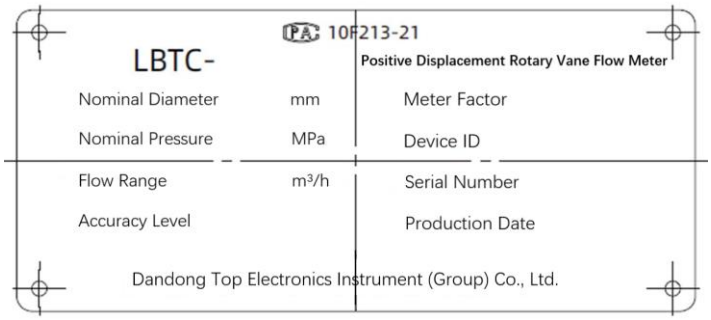


**Figure 4 Product Name Plate**

5.1.2 Check whether the quantity and material of each part are correct against the packing list.

### 5.2 Check the contents

5.2.1 Check the appearance of the meter for defects, damage, etc.

5.2.2 If LBTC Flow Meter and its accessories are packaged separately, please confirm the quantity and specifications are correct before unpacking.

## 6 Installation

### 6.1 Installation tools

6.1.1 Wrenches, flange washers and flange bolts for process connections

### 6.2 Installation technical requirements (Figure 5 Flow Meter Installation Diagram)

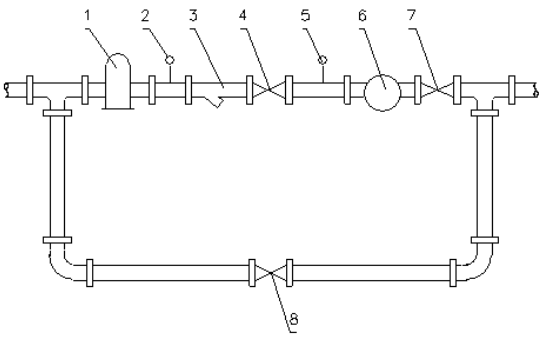


**1-Degasser 2-Pressure Gauge 3-Filter 4,7,8-Valve 5-Thermometer**

**6- LBTC Positive Displacement Rotary Vane Flow Meter**

Figure 5 Flow Meter Installation Diagram

6.2.1 Connection pipe of LBTC Positive Displacement Rotary Vane Flow Meter should be with same diameter and axis as inlet and exit of flow meter. No projections on pipe wall allowed. Connection pipe near flow meter can't have obvious transformation to minimize the impact on flow meter due to expansion and contraction of pipeline.

6.2.2 When installing a flow meter in new pipe, in order to avoid any damage caused by sundries in pipe along with the fluid entering into flow meter, it's suggested to replace the flow meter with short pipe to clean or purge the pipe. Swept airflow through the surface is strictly prohibited.

6.2.3 Before installation, the cover on the flowmeter interface flange should be removed. If the impurities and gas content of the fluid is high, it is recommended to install a filter, degasser or degassing filter before the flowmeter; filter mesh should be selected according to the following range; DN25 ~ 50 using 20 mesh; DN80 ~ 150 using 15 mesh; DN200 ~ 300 using 10 mesh.

6.2.4 The flow meter should be installed in the main pipe horizontally, and the inclination is allowed no more than 15° to ensure balanced flow meter scraper clearance and accurate measurement.
6.2.5 During installation, the direction of the arrow on the flowmeter should be consistent with the flow direction of the fluid, and the flowmeter and the straight pipes on both sides should be coaxial lines.

6.2.6 Flow throttle valve and switch valve installed on pipe should work reliably. For observation and inspection conveniently, abscission of bypass pipe can use shut-off device which consists of two on-off valves in series. A small-diameter leak detection valve is set on the connecting short pipe between the two valves, so as to check the cut-off performance of the valve conveniently.

6.2.7 Follow the diameters on the nameplate of flow meter strictly: max. flow, operating pressure, operating temperature, fluid viscosity cannot exceed the range specified on the nameplate of flow meter.

6.2.8 When using the flow meter, you should open the valve slowly and increase the flow gradually until reaching needed flow, but not more than the maximum flow limited on the flowmeter nameplate.

## 7 Failure analysis and troubleshooting

| Failure Description | Causes | Troubleshooting Method |
|---|---|---|
| No signal output | 1. There are debris in the pipeline to enter the metering chamber, causing the rotor jammed<br>2. Display meter wiring error<br>3. Display meter fault itself | 1. Disassemble and wash the flow meter, clean the filter and pipes, replace damaged parts.<br>2. Check if the wiring is correct<br>3. Overhauling the display instrument |

| | | |
|---|---|---|
| Excessive flow meter noise | 1. The clearance between cam and rotor wheel is too small.<br>2. Improper use, too much flow overload<br>3. Gas enters the system or vibration occurs in the system.<br>4. Long service life, beyond the life of the flowmeter | 1. Readjust the clearance between cam and rotor wheel.<br>2. Install a flow limiting device downstream of the flow meter.<br>3. Overhaul the system to eliminate vibration<br>4. Replace the flow meter with a new one |
| Leakage in the flow meter | 1. Loose copper gaskets for block seals<br>2. Loose copper gaskets for bottom cover seal<br>3. Aging of the rubber seal on the cover | 1.Tighten the bolt or replace the copper pad.<br>2. Tighten the bolt or replace the copper pad.<br>3. Replace the seals. |
| Pointer moves on and off, unstable value. | Loose or inflexible parts of the indication system connection | Elimination of loose joints |
| No display of the totalizer after power on. | No battery installed, or battery is dead, or power supply is incorrectly installed | Check that the battery is working properly and the power supply is installed correctly |
| Inaccurate display of the totalizer. | Wrong input of flow meter coefficients. | Re-enter the correct instrument coefficients |
| Instantaneous flow rate inaccuracy. | The flow transmitter sensor is not in place. | Tighten the flow transmitter sensor to the proper depth and observe. |
| Instrument data is not accumulated | The flow transmitter sensor is not in place. | Check the wiring. If the wiring is correct, then slide a magnet at 2mm from the surface of the probe to see if the meter reacts.<br>1, If it works, it indicates the original probe installation distance is too far away, need to be adjusted.<br>2, If it doesn't work, it indicates that the probe is damaged or the instrument itself is faulty. Please return the instrument to the factory to repair. |
| No remote signal | No 12V power supply | After connecting the external power supply, check whether the power supply indicator is on. If not, then the power is not provided.<br>You can also use a multimeter to directly measure the ends of the 12V power supply to check for power. |

## 8 Maintenance

Once the flow meter is in service, it must be maintained to ensure that its measurements are accurate and reliable.

8.1 Check that the flow range does not exceed the maximum flow shown on the nameplate.

8.2 Observe whether there is regular noise in the flowmeter housing in operation, and whether there are large impurities and foreign matter into the flowmeter.

8.3 It shall be recalibrated after the replacement of internal parts.

8.4 Flow meters in normal use shall be regularly calibrated in accordance with industry regulations.

8.5 When mechanical counting heads are used, they should be lubricated with oil at regular intervals.

## 9 Disassembly

### 9.1 Warnings

Before disassembly, attention should be paid to hazardous process conditions, e.g., pressure in the vessel, hot, corrosive, or toxic media, etc.

### 9.2 Waste removal

Please follow the existing guidelines for waste disposal in your region.

## 10 Product Certification

| Product Certification | | |
|---|---|---|
| Type of Certification | Certificate Number | Scope/Description of Certification |
| Pattern Approval of Measuring Instrument | PA | 10F213-21 |